MWIR Continuous zoom – Commercial off the shelf lens

MERCURY D x BE

MWIR 30-600, 40-860mm, 45–1075mm F/5.5
Continuous zoom Lens for 640x512x15µ cooled detectors

FEATURES / APPLICATIONS / CAPABILITIES

- Special lens for low boresight and retention error
- Rugged and robust built for harsh environmental conditions
- Ultra long-range zoom lens with highest optical zoom ratio

	HFOV for Wide				HFOV for Narrow			
	30mm	40mm	45mm	60mm	600mm	860mm	1075mm	1415mm
640x512x10u	12.1°	9.15°	8.1°	6.1°	0.61°	0.43°	0.35°	0.26°
640x512x 12u	14.5°	10.9°	9.7°	7.32°	0.73°	0.51°	0.41°	0.31°
640x512x1 5u	18.1°	13.6°	12.1°	9.15°	0.92°	0.64°	0.51°	0.4°

PARAMETER		VALUE		
Main	Sub			
OPTICAL		MERCURY D 600	MERCURY D 860	MERCURY D 1075
Focal Length / F#		30-600mm F/5.5	40-860mm F/5.5	45-1075mm F/5.5
Detector (FPA) type / size		Up to 640 x 512 x 15µ		
Working Spectral Range		3 - 5µ		
Optical Coatings	All internal surfaces	High efficiency AR coating		
	Front surface	DLC coating (please note: HDAR is available upon request)		
CSH		19-22mm		
MECHANICAL				
Focus / Zoom mechanism		Motorized		
Through zoom boresight		≤0.075 mm radius at the focal plane		
NFOV boresight retention		≤0.03 mm radius at the focal plane		
Focus Range		30m – Infinity	50m – Infinity	100m - Infinity
Total Weight		2.3Kg	2.86Kg	4.93Kg
Ext. Dimensions ø x length (mm)		135 x 196	188 x 225.5	228 x 275.3
ELECTRICAL				
Power Input		12VDC, 1.0 A		
Communication Protocol		RS-422/232 Full Duplex		
ENVIRONMENTAL				
Operating / Storage Temperature		-25°C to +55°C / -40°C to +70°C		
Shock and Vibrations		Per applicable standard		
Front lens sealing		IP67		

*All values are nominal: to within ±5%

HFOV for Wide						HFOV for Narrow					
	25mm		30mm		40mm		460mm		660mm		825mm	
	640x512	HFOV*	640x512	HFOV*	640x512	HFOV*	640x512	HFOV*	640x51	HFOV*	640x51	HFOV*
12u	17.5°	0.027	14.6°	0.023	11°	0.017	0.61°	0.0015	0.7°	0.001	0.5°	0.0083
15u	21.7°	0.034	18.2°	0.029	13.7°	0.021	1.5°	0.0019	0.8°	0.0013	0.7°	0.001

MWIR Continuous zoom – Commercial off the shelf lens

ODEM x BE

MWIR 25-460mm, 30–660mm, 40– 825 mm F/4.0
Continuous zoom Lens for 640 x 512 x 15µ cooled detectors

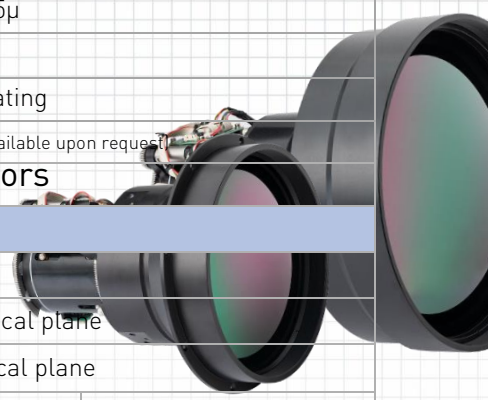

- Constant F# 4.0
- Rugged design to fit various applications
- Focus is maintained throughout the entire zoom range, with extremely fast zoom and focus response

PARAMETER		VALUE		
Main	Sub			
OPTICAL		ODEM460	ODEM660	ODEM825
Focal Length / F#		25-460mm F/4.0	30-660mm F/4.0	40-825mm F/4.0
Detector (FPA) type / size		Up to 640 x 512 x 15µ		
Working Spectral Range		3.6 – 4.8µ		
Optical Coatings	All internal surfaces	High efficiency AR coating		
	Front surface	DLC coating (please note: HDAR is available upon request)		
CSH		19-22mm		
MECHANICAL				